US07314693-20080101-C00624

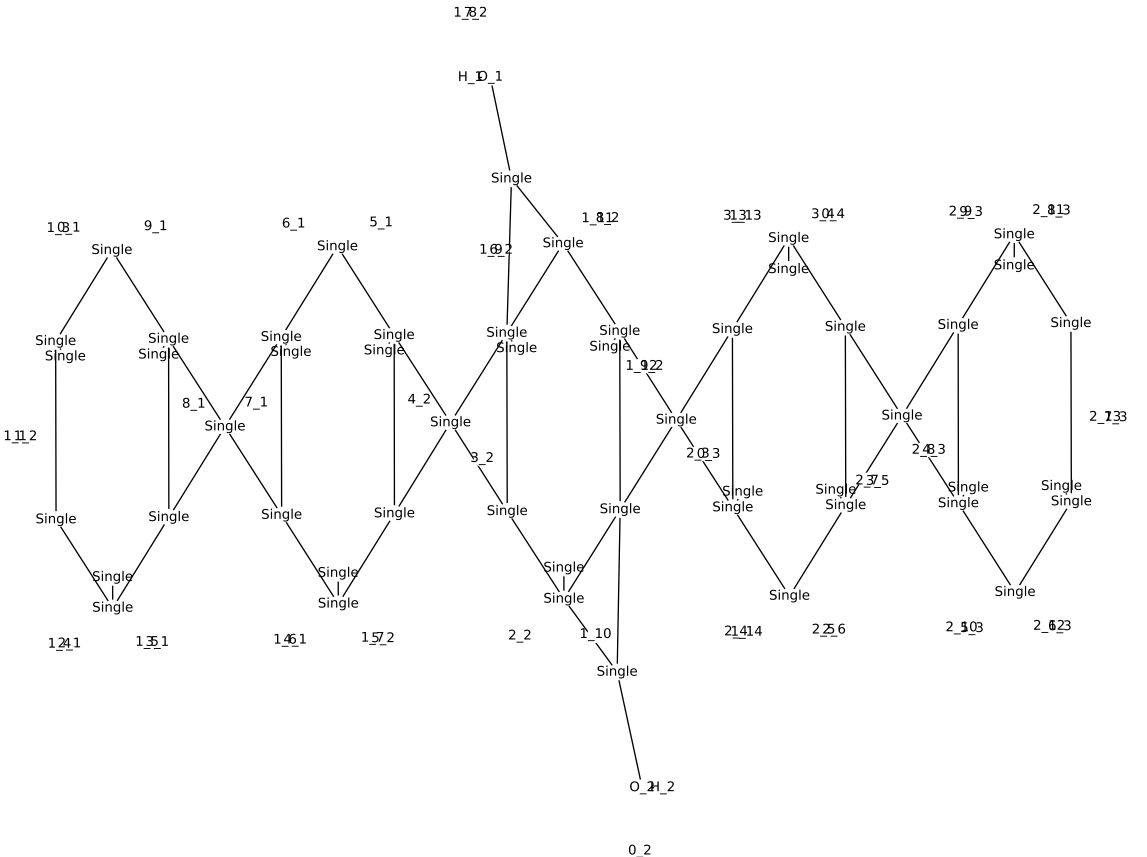
1_7
8_2
H_1
D_1
Single
1_0
3_1
9_1
6_1
5_1
1_8
1_6
9_2
3_1
3_1
3
3_0
1_4
2_9
9_3
2_8
1_3
Single
Single
Single